Supplementary Information for:

A Standard Electrolyzer Test Cell Design for Evaluating Catalysts and Cell Components for Anion Exchange Membrane Water Electrolysis

Abdulhai H. Faqeeh[1,2], Mark D. Symes[1]*

[1] WestCHEM, School of Chemistry, University of Glasgow, Glasgow, G12 8QQ, UK

[2] Department of Chemistry, King Khalid University, Guraiger, Abha 62529, Saudi Arabia

* Corresponding author: Email: mark.symes@glasgow.ac.uk (M. D. Symes)

Guidance for Assembling and Operating the Water Electrolyzer

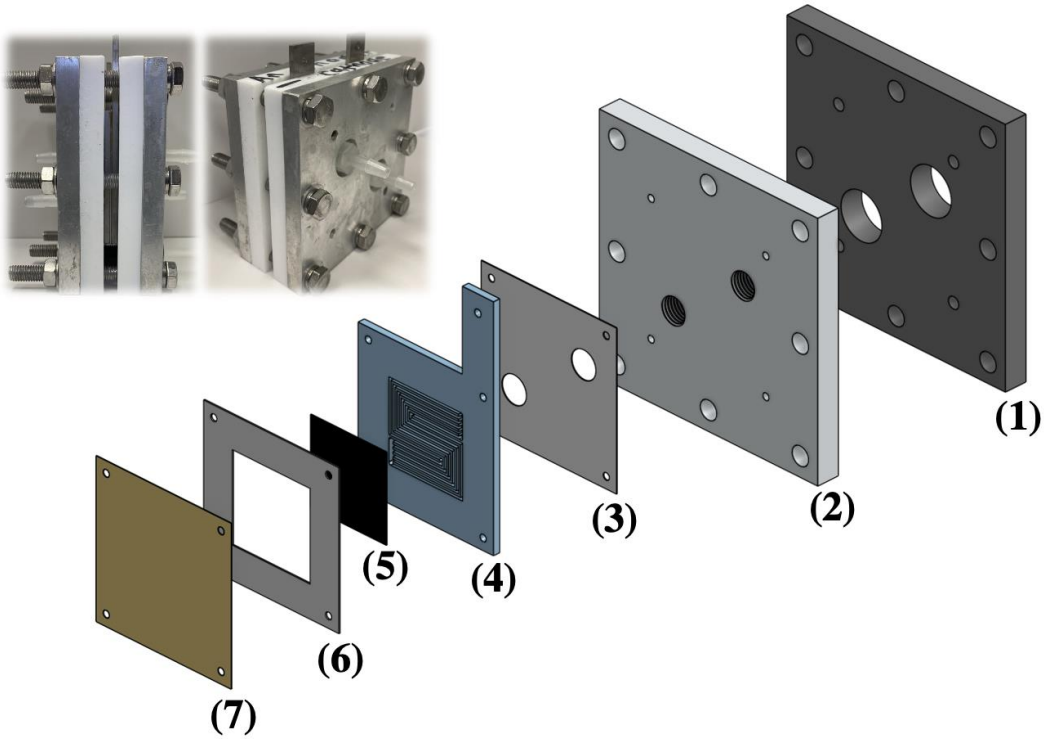

Fig. S1a. The components of one side of the flow cell: (1) end plate, (2) polytetrafluoroethylene (PTFE) insulating plate, (3) PTFE insultating gasket, (4) Ti bipolar plate, (5) gas diffusion layer, (6) other PTFE gasket, (7) anion exchange membrane (FAA-3-50).

The dimensions (in mm) of the three major flow cell components (end, insluating, and bipolar plates) modelled by computer-aided design are provided in the following 2D line drawings (Fig. S1b-S1e), so that these measuremnts can be used for manufacturing these parts. The thickness of these components is not as critical as the dimensions that are shown. In this work, the thicknesses of these components was as follows: the thickness of both end plates and PTFE insulating plates is 10 mm, while the thickness of the bipolar plates is 3 mm.

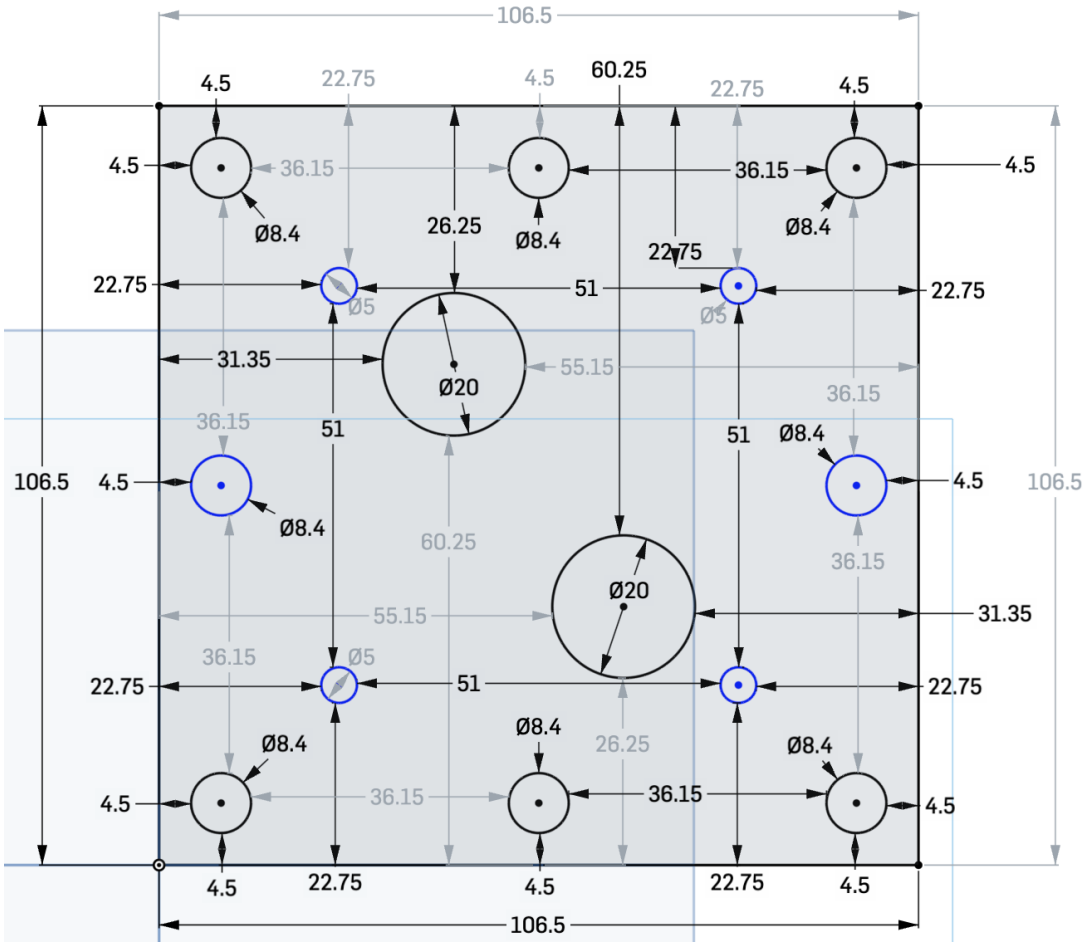

Fig. S1b. The dimensions of the end plate.

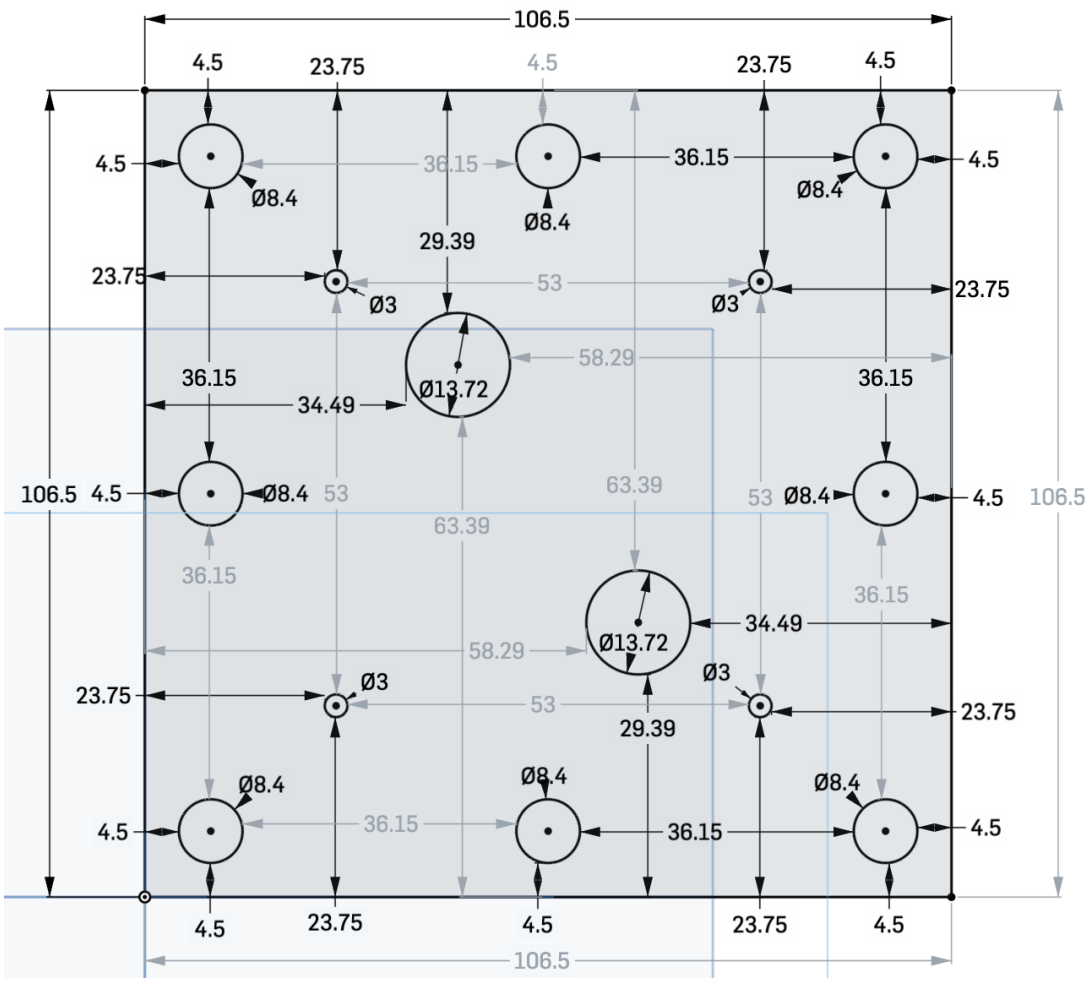

Fig. S1c. The dimensions of the insulating plate.

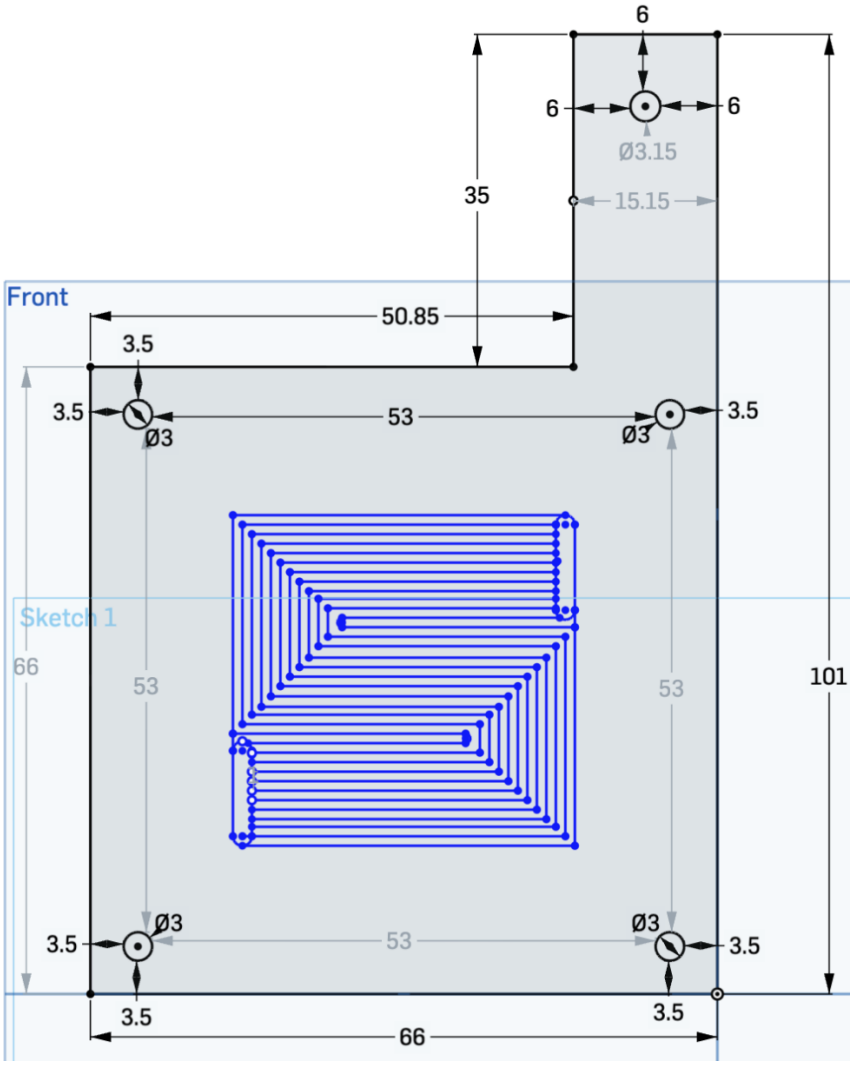

Fig. S1d. The dimensions of the bipolar plate.

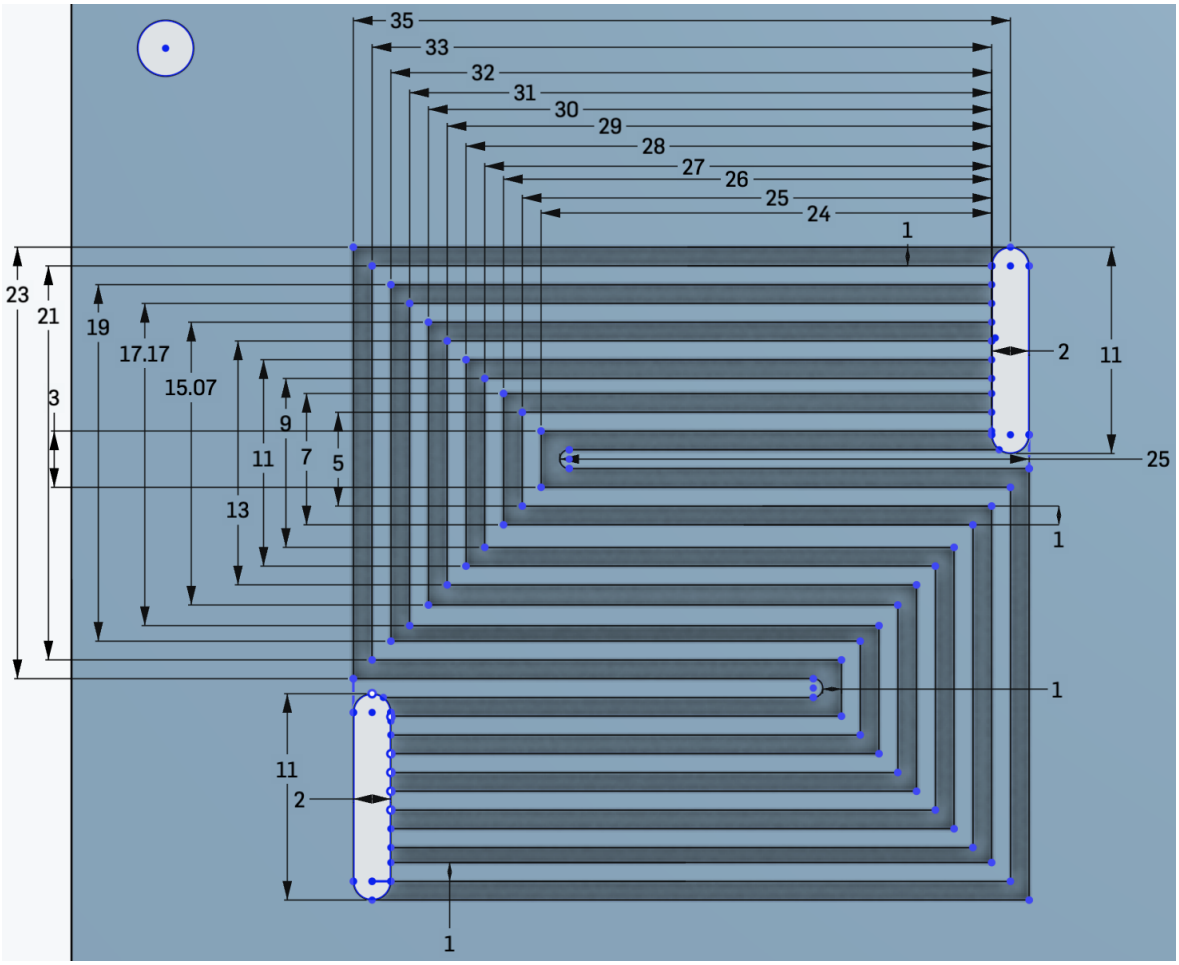

Fig. S1e. The dimensions of the bipolar plate flow channels.

Assembly steps:

1) Prepare the inlet/outlet fittings. Cut a length of PTFE thread tape (10–15 cm) and wrap this around the thread of the outlet/inlet fitting*. Repeat this for all 4 fittings for preventing any possible leakage (Fig. S1f).

* Masterflex fitting, polypropylene, straight, hosebarb to threads; size: 6.35 mm inner diameter × 6.35 mm national pipe thread (NPT) (M)).

Fig. S1f. Wrapping PTFE tape on the polyprolylene hosebarb/fitting.

2) Attach each fitting into the PTFE insulating plate using a wrench, making sure not to screw so far that the bottom of the fitting protrudes from the other side of the insulating plate (i.e. the other side should be flat). Repeat for all fittings on both insulating plates (Fig. S1g).

Fig. S1g. The attachment of a tube fitting into a PTFE insulating plate.

3) Place a stainless steel end plate onto a large cork ring (or similar) and insert the 4 guide rods (Fig. S1h). It is critical to keep the flow cell flat throughout the assembly process, at least until the process of tightening the bolts (see steps 5-6 below) in order to avoid the displacment of the flow cell components, which might otherwise cause leakage during operation. A bench vice can be used for holding the flow cell if required.

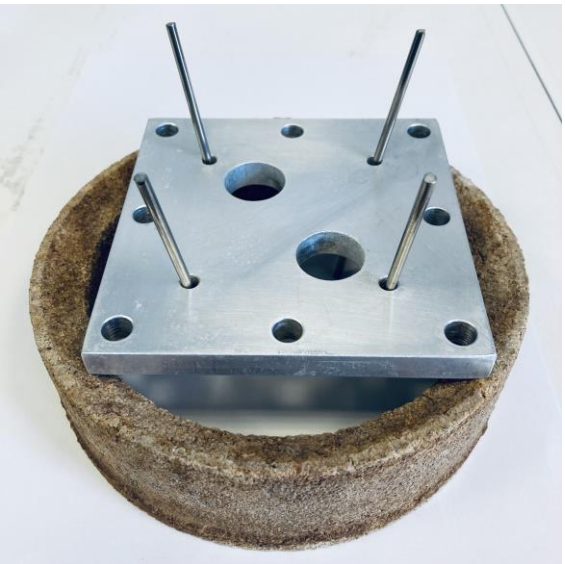

Fig. S1h. Placing an end plate on a cork ring and 4 guide rods for assembly.

4) Commence assembly of the flow cell components based on the order in Fig. S1a, making sure the outlet/inlets are aligned appropriately. Also, the thickness of gaskets should be 25–40% less than the thickness of the gas diffusion layers to ensure an appropriate contact between the gas diffusion layers and membrane, and to prevent any possible leakage. The thickness of each gasket per each gas diffusion layer is as follows: 1) stainless steel fiber paper (gasket thickness: 0.508 mm), 2) carbon cloth (gasket thickness: 0.254 mm), 3) Sigracet carbon paper (gasket thickness: 0.127 mm). The flow cell consists of two sets of each component, except the membrane; therefore, the order in Fig. S1a should be reversed after adding the FAA-3-50 membrane, so as to follow the full assembly order:

(1) end plate – (2) insulating plate – (3) gasket (between the insluating and bipolar plates) – (4) bipolar plate – (5) gasket (between the bipolar plate and membrane) – (6) gas diffusion layer – (7) membrane – (8) gas diffusion layer – (9) gasket (between the bipolar plate and membrane) – (10) bipolar plate – (11) gasket (between the bipolar and insulating plates) – (12) insulating plate – (13) end plate.

Note: the gaskets can be printed using the computer-aided design files provided (#3 and #5). In case of preparing/cutting the gaskets manually (e.g. using a scalpel), the computer-aided design files (#8 and #9) provided can be used for printing gasket templates, facilitating the cutting process.

5) Place washers on eight M8 (8 mm × 75 mm) hex bolts (fully threaded setscrew) and put them in position around the cell. At the end of each bolt, place another washer and a nut (Fig. S1i).

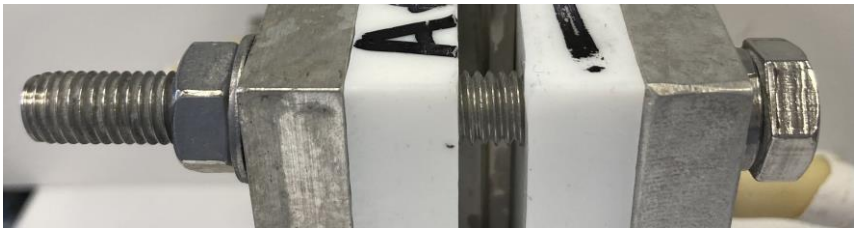

Fig. S1i. Placing a washer on the bolt head side and another washer on the nut side

Note: keep pressing down the flow cell during inserting the hex bolts (Fig. S1j), to avoid any possible displacemnt of the cell parts, preventing leakage.

Fig. S1j. Pressing the flow cell down while inserting the hex bolts.

6) Ensure that the torque wrench is set to 5.65 Nm and attach the size 13 fitting.

7) Use a spanner and torque wrench to tighten each bolt. The wrench will click when each bolt is torque-tightened to 5.65 Nm.

8) Connect the potentiostat/booster to the flow cell through the bipolar plates, ensuring that the booster cables are tightened properly to the bipolar plates (Fig. S1k).

Fig. S1k. Booster and potentiostat connections to the flow cell.

10) Before attaching the tubing to the T-pipe fittings, wrap the tubing with PTFE tape to prevent any possible leakage (Fig. S1l).

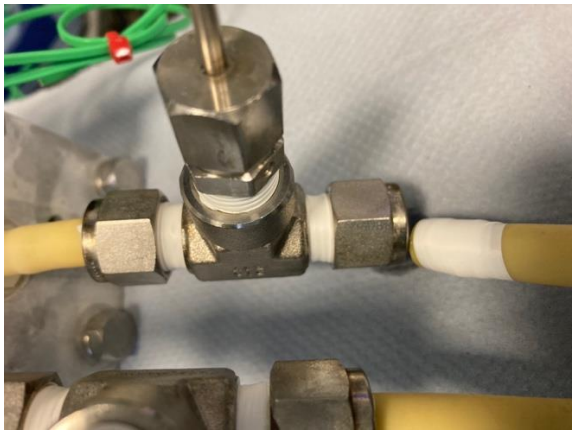

Fig. S1l. Applying PTFE tape to the tubing.

11) Two lengths of tubing per side of the flow cell are required. One longer section of tubing goes from the electrolyte reservoir through the peristaltic pump and into the inlet of the flow

cell, and the other section of tubing should connect to the outlet of the flow cell with its other end being in the electrolyte reservoir (Fig. S1m).

12) Two T-pipe fittings (Stainless steel Swagelok tube fitting, female branch T, 9.53 mm tube outer diameter × 9.53 mm tube outer diameter × 6.35 mm female national pipe thread (NPT)) are attached to the inlet and outlet channels on each side of the flow cell, and a thermocouple is inserted into each of the four T-pipe fittings (Fig. S1m).

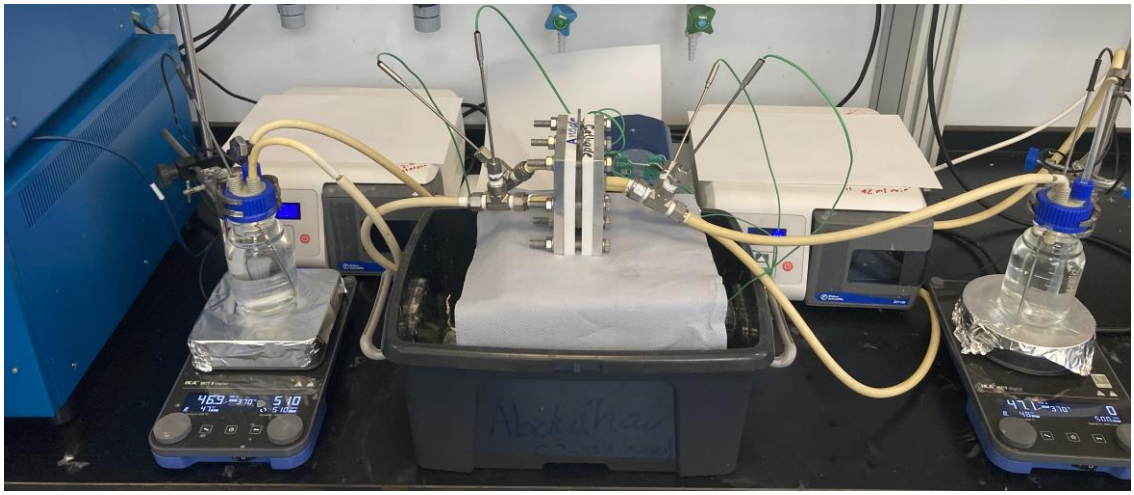

Fig. S1m. The anion exchange membrane water electrolysis setup.

Table S1 The technical specifications of the cathode gas diffusion layers, as given by the manufacturers.

	Sigracet 22 BB carbon paper	**Toray TGP-H-060 carbon paper**	**Carbon Cloth (W1S1010)**	**CeTech 210S carbon paper**
Material Type	Carbon fiber paper	Carbon paper	Cloth	Carbon fiber paper
Thickness	0.215 +/- 0.02 mm	0.19 +/- 0.05 mm	0.365 +/- 0.015 mm	0.21 +/- 0.021 mm
Electrical Resistivity	<10 mΩcm²	NA	<14 mΩcm²	<15 mΩcm²
PTFE Treatment	5%	NA	5%	Yes
Microporous Layer (MPL)	Yes, on one side	No	Yes, on one side	Yes, on one side